PU WALL SANDWICH PANEL

EUROPANELS
PRODUCER OF SANDWICH PANELS

www.europanels.pl

POLTHERMA PS

Plate with concealed attachment



PolTherma PS is a wall sandwich panel with a core of rigid PU foam, attached to the substructure invisibly (so-called hidden contact).

PolTherma PS board is a very popular product that finds recognition among customers who require a high aesthetic standard with standard profiling.

Unlike other wall panels with concealed joints in our range, the nose covering the joint of PolTherma PS panels overlaps the next panel without a visible joint. Such a construction makes it possible to achieve a uniform sheet of elegant embossing on the entire facade.

Available PolTherma PS board profiles:

- microprofiling – PolTherma PS M
- linear profiling – PolTherma PS L

Technical data

Modular (coverage) width [mm].	1025
Reaction to Fire	Bs1d0
Core	Europan PU Wall System Core – rigid polyurethane foam, λ_D = 0.022 W/(m·K) at +10°C including the effect of aging, according to PN-EN 14509:2013-12

Technical drawings

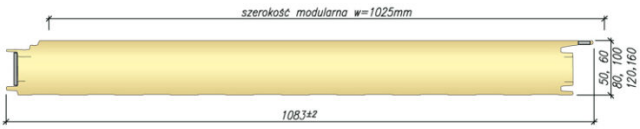

Available board thicknesses [mm].	Thermal conductivity coefficient λ_D [W/(m·K)].	Heat transfer coefficient $U_{d,S}$ [W/(m²·K)].	Weight of 1 m² [kg].	Maximum number of boards in a package [pcs].
60	0,022	0,39	11,5	18
80	0,022	0,29	12,3	14
100	0,022	0,23	13,0	11
120	0,022	0,19	13,8	9
160	0,022	0,14	15,3	7

EUROPANELS
PRODUCER OF SANDWICH PANELS

Connections

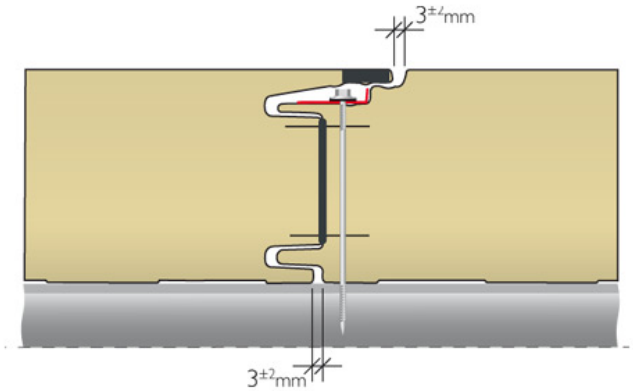

Profiling

External profiling



