EPS ROOF SANDWICH PANEL

EUROPANELS
PRODUCER OF SANDWICH PANELS

www.europanels.pl

THERMADECK PRO

EPS roof panel with concealed or visible joint



ThermaDeck PRO is a roof sandwich panel with an EPS polystyrene core. They can be fastened to the substructure with a kit consisting of a hidden fastener and a screw (so-called hidden fastening) or directly with a through-screw on the through-screw (so-called visible fastening).

ThermaDeck PRO boards are designed for use as roofing in all types of buildings where the slope of the roof in the direction of the slope is at least 4° (7%) for a covering consisting of a single board (up to 7 m) or 6° (10%) for boards joined at length, installed with skylights, etc.

ThermaDeck PRO roof sandwich panel comes in profiling:

- trapezoidal profiling – ThermaDeck PRO T
- linear profiling – ThermaDeck PRO L

ThermaDeck PRO sandwich panel – application

- Commercial facilities
- Industrial facilities
- Logistics centers
- Warehouses
- Halls
- Agribusiness

Technical data

Modular (coverage) width [mm].	1190
Fire resistance	Class E
Core	Styrofoam of at least class E reaction to fire, self-extinguishing. Apparent density of 15 – 20 kg/m³. Thermal conductivity coefficient (declared value) λ_D = 0.040 W/(m·K)

Technical drawings

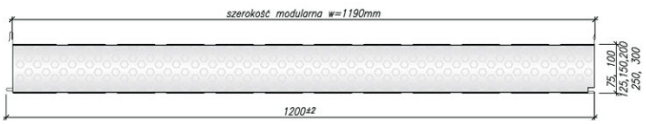

EUROPANELS
PRODUCER OF SANDWICH PANELS

Available board thicknesses [mm]	Thermal conductivity coefficient λ_D [W/(m·K)].	Heat transfer coefficient $_{UC}$ [W/(m²·K)].	Weight of 1 m² [kg].	Maximum number of boards in a package [pcs].
75	0,037	0,46	10,2	7-8
100	0,037	0,36	10,6	7-8
150	0,037	0,24	11,1	6
200	0,037	0,18	11,9	4-5
250	0,037	0,15	12,8	4
300	0,037	0,12	13,6	3

Connections

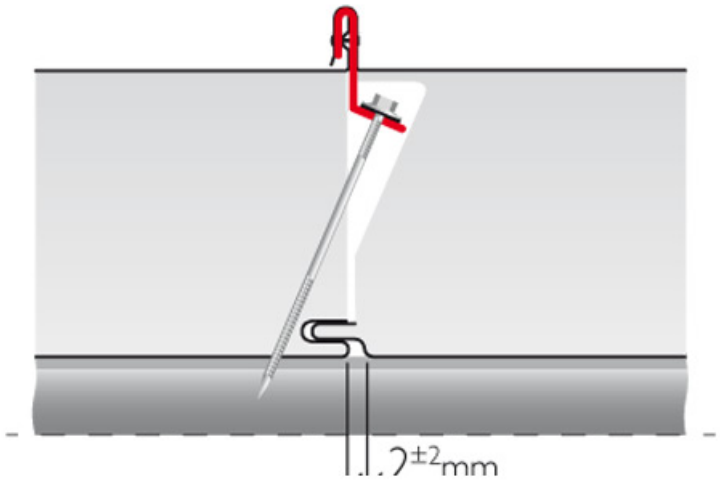

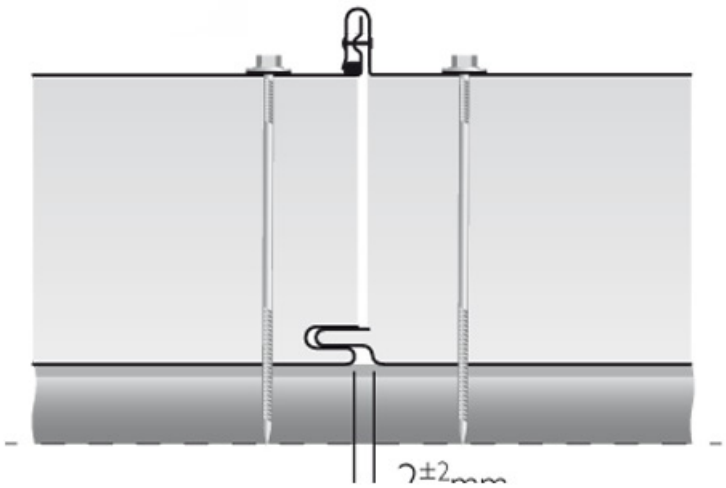

Profiling

External profiling

ThermaDeck PRO T





ThermaDeck PRO L



ThermaDeck PRO T

