EPS WALL SANDWICH PANEL

EUROPANELS
PRODUCER OF SANDWICH PANELS

www.europanels.pl

THERMASTYLE PRO

Lightweight panel wall system



ThermaStyle PRO is a wall sandwich panel with an expanded polystyrene (EPS) core that can be attached to a support structure with a fastener that is not visible from the facade. As a result, the surface of walls built with the ThermaStyle PRO system is uniform and undisturbed by fasteners. ThermaStyle PRO boards can also be installed in the standard way, i.e. Directly through fasteners to the substructure – wooden, steel or reinforced concrete.

The versatile nature of ThermaStyle PRO panel allows for quick, very inexpensive and durable erection of lightweight wall construction for a variety of purposes.

ThermaStyle PRO polystyrene-core sandwich panel profiling:

- linear profiling – ThermStyle PRO L
- trapezoidal profiling – ThermaStyle PRO T
- microprofiling – ThermaStyle PRO M

ThermaStyle PRO sandwich panel – application

- Commercial facilities
- Industrial facilities
- Logistics centers
- Warehouses
- Halls
- Garages
- Partitions

Technical data

Modular (coverage) width [mm].	1190
Fire resistance	NRO classification
Core	Styrofoam of at least class E reaction to fire, self-extinguishing. Apparent density of 15 – 20 kg/m³. Thermal conductivity coefficient (declared value) λ_D = 0.040 W/(m·K)

Technical drawings

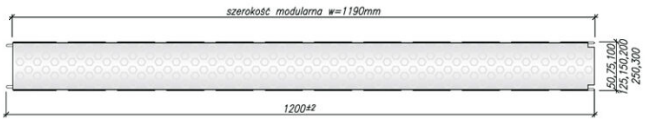

EUROPANELS
PRODUCER OF SANDWICH PANELS

Available board thicknesses [mm]	Thermal conductivity coefficient λ_D [W/(m·K)].	Heat transfer coefficient $_{UC}$ [W/(m²·K)].	Weight of 1 m² [kg].	Maximum number of boards in a package [pcs].
50	0,037	0,62	9,4	10
75	0,037	0,44	9,8	13
100	0,037	0,34	10,2	10
125	0,037	0,28	10,6	8
150	0,037	0,23	11,1	7-8
200	0,037	0,18	11,9	5
250	0,037	0,15	12,8	4-5
300	0,037	0,12	13,6	3

Connections

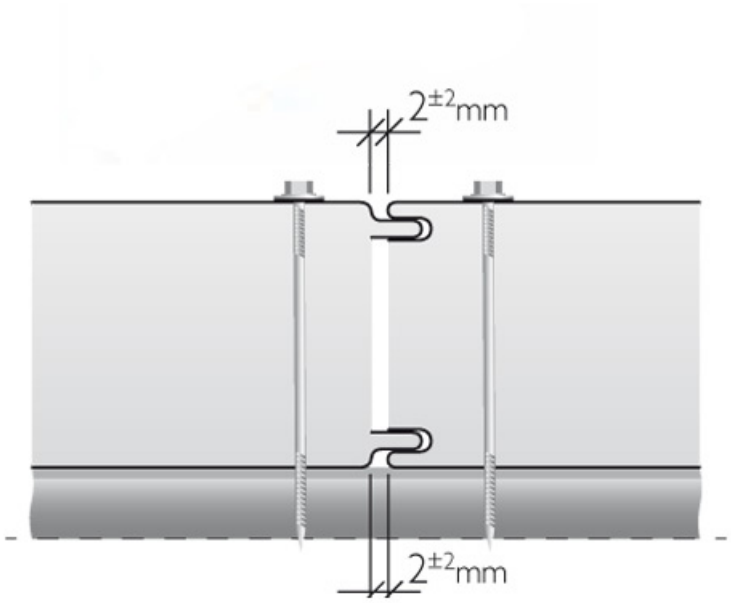

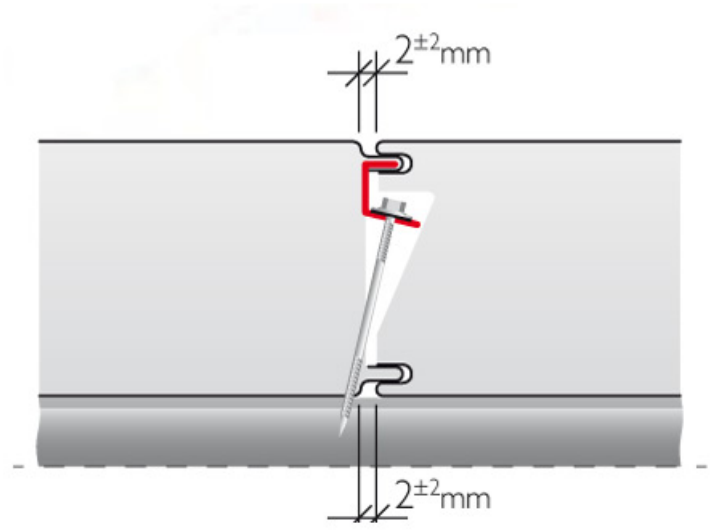

Profiling

External profiling

ThermaStyle PRO L



ThermaStyle PRO T



ThermaStyle PRO M



ThermaStyle PRO T



ThermaStyle PRO L

