PU WALL PANEL

EUROPANELS
PRODUCER OF SANDWICH PANELS

www.europanels.pl

# POLTHERMA DS

**Concealed fixing**

**Modern embossing of the outer cladding**



PolTherma DS is a wall sandwich panel with a core of rigid PU foam, fastened to the support structure invisibly (so-called Hidden Joint). The appropriate design of the panel's edge makes it possible to hide the mounting screw in a specially profiled part of the lock, which is covered by the adjacent panel. In this way, the facade of the building is devoid of any visible fixings, being a coherent sheet of elegant embossing.

The decorative wall panel line is a unique offering on the construction market.

**PolTherma DS wall sandwich panel is available in profiles:**

- oblique profiling – PolTherma DS S
- cassette profiling 250 – PolTherma DS K250
- cassette profiling 500 – PolTherma DS K500
- microcassette profiling 500 – PolTherma DS MK500

PolTherma DS is an example of the most advanced technology currently available in sandwich panels worldwide, both in terms of polyurethane core molding, but also in terms of industrial design, related to advanced cladding profiling processes.

The unique PolTherma DS wallboard system was awarded the prestigious GOLD MEDAL of the Poznań International Fair and the AGROTECH Kielce International Fair.

## PolTherma DS sandwich panel – application

- Commercial facilities
- Industrial facilities
- Halls
- Agribusiness
- Logistics centers
- Magazines

## Technical data

| | |
|---|---|
| **Modular (coverage) width [mm].** | 1025 |
| **Reaction to Fire** | Bs1d0 |
| **Core** | Europan PU Wall System Core – rigid polyurethane foam, $\lambda_D$ = 0.022 W/(m·K) at +10°C including the effect of aging, according to PN-EN 14509:2013-12 |

## Technical drawings

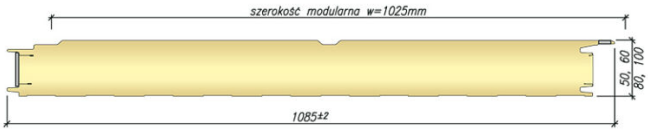


| **Available board thicknesses [mm]** | **Thermal conductivity coefficient $\lambda_D$ [W/(m·K)].** | **The heat transfer coefficient $U_{d,S}$ for S-profiling [W/(m²·K)].** | **The heat transfer coefficient $U_{d,S}$ for MK profiling [W/(m²·K)].** | **Weight of 1 m² [kg].** | **Maximum number of discs in a package [pcs].** |
|---|---|---|---|---|---|
| 60 | 0,022 | 0,46 | 0,44 | 11,5 | 18 |
| 80 | 0,022 | 0,32 | 0,31 | 12,3 | 14 |
| 100 | 0,022 | 0,25 | 0,24 | 13,0 | 11 |
| 120 | 0,022 | 0,20 | 0,20 | 13,8 | 9 |
| 160 | 0,022 | 0,15 | 0,15 | 15,3 | 7 |

## Connections

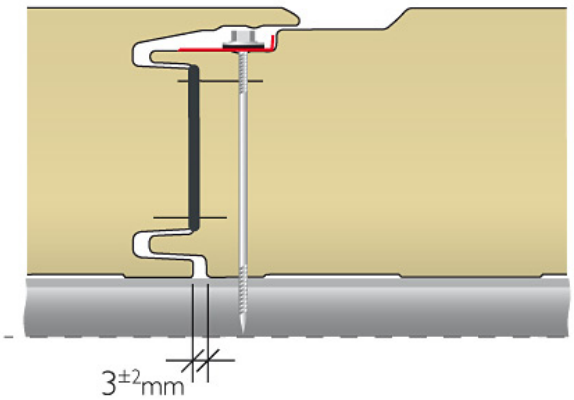

# Profiling

## External profiling

PolTherma DS S

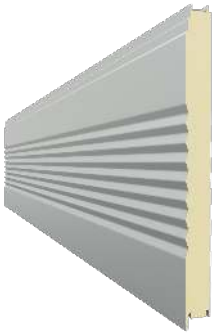

PolTherma DS K250



PolTherma DS K500



PolTherma DS MK500

